MAGNASPHERE®

PIR360-MM

Installation Guide

Installation Guide v3.0 - 2026.07.27

This document may not, in whole or in part, be copied, photocopied, reproduced, translated, or reduced to any electronic medium or machine-readable form without prior written consent. Every effort has been made to ensure the accuracy of this manual. However, no warranties are made with respect to this documentation, and any implied warranties of merchantability and fitness for a particular purpose are disclaimed. The authors shall not be liable for any error or for incidental or consequential damages in connection with the furnishing, performance, or use of this manual or the examples herein. The information in this documentation is subject to change without notice.

magnasphere.com
For technical assistance, contact **support@magnasphere.com** or call **262-347-0711**.

Contents

1. Overview 05

2. Device Parts 06

3. Installation Considerations 09

4. Coverage Pattern 11

5. Wiring 15

6. Device Configuration 18

6.1. End-of-Line (EOL) Resistors 20

6.2. User Settings 24

6.2.1. Setting the Installation Height..... 24
6.2.2. Setting the Sensor Sensitivity..... 25
6.2.3. Enabling/Disabling Visual Feedback 26
6.2.4. Configuration Example 27

7. Mounting 28

7.1. Ceiling Mounting 29
7.2. Octogonal Electrical Box Mounting 31

8. LED Patterns for Visual Feedback 33

9. Walk Test 34

10. Specifications.....36

11. Troubleshooting 38

1. Overview

This panoramic 360° ceiling-mount motion sensor is capable of covering a diameter of up to 59 feet (18 meters). It features a compact, easy-to-install design with adjustable height and sensitivity settings, ensuring optimal performance in a variety of environments. The sensor also includes an optional visual detection indicator for straightforward user interaction and testing/calibration. Additionally, it offers configurable end-of-line resistors, making it compatible with most security panels on the market.

2. Device Parts

Sensor Front View

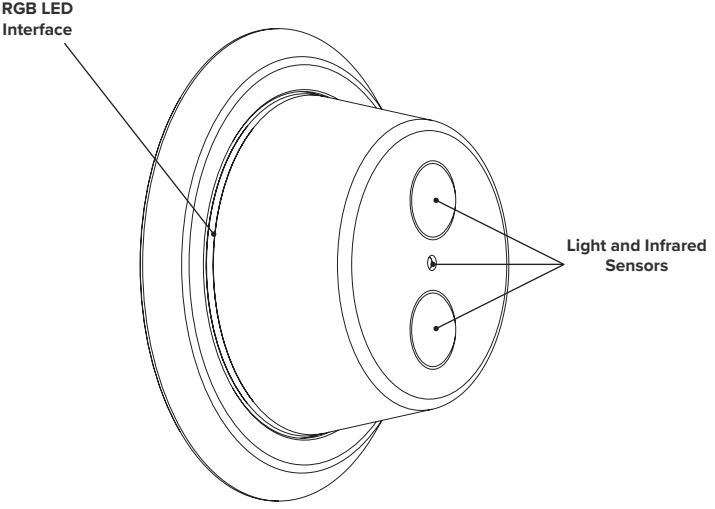

Sensor Rear View

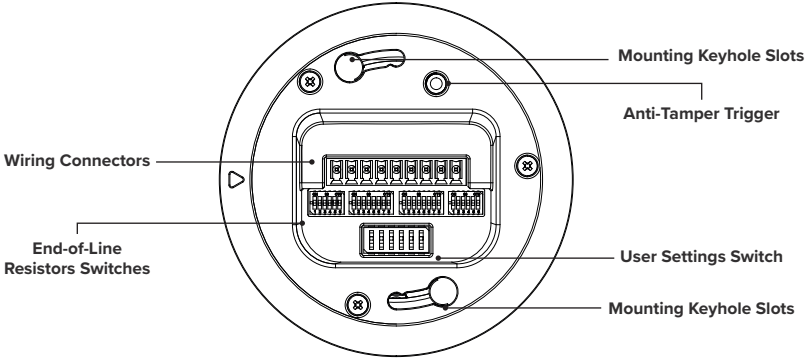

Mount Plate

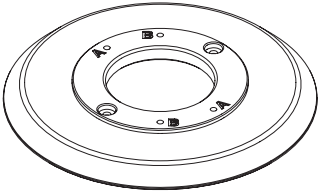

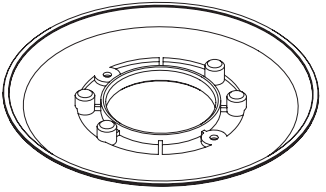

Base Plate

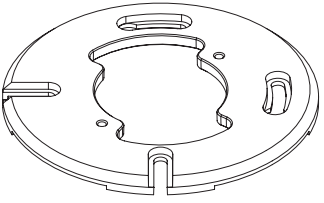

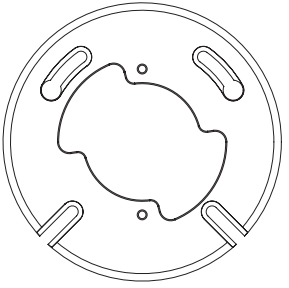

3. Installation Considerations

1

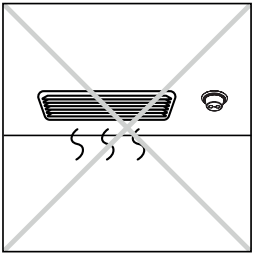

Avoid installing the sensor in environments with turbulent air. Keep it away from air conditioning vents, heating sources, and ventilation ducts.

2

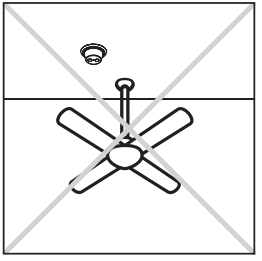

Avoid moving objects and rotating machines (e.g. ceiling fans) within the coverage area.

3

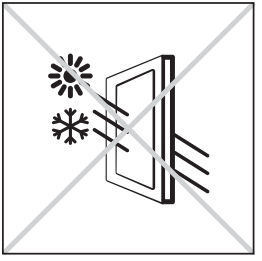

Position the unit away from windows facing outside and items susceptible to rapid temperature changes and direct sunlight.

4

Do not install the detector outdoors.

5

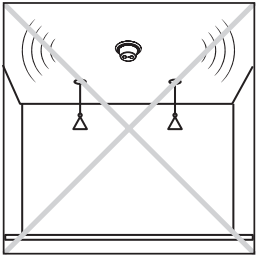

Mount it on a solid stable surface.

6

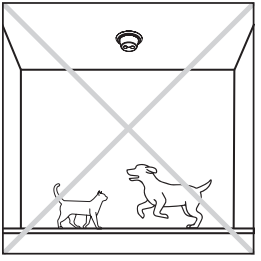

Avoid installing the sensor in areas with pets, as their movements may trigger false alarms.

4. Coverage Pattern

Side View

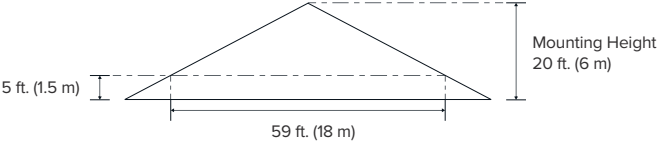

Top View

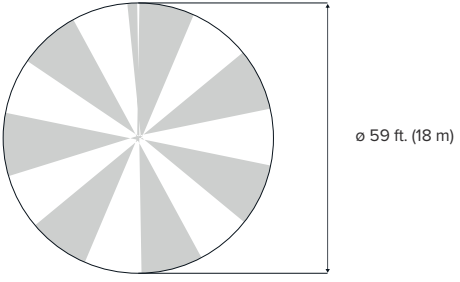

For UL Certified Installations, the coverage radius is 53 ft (16 m) at 20 ft (6 m) height at medium sensitivity.

Side View

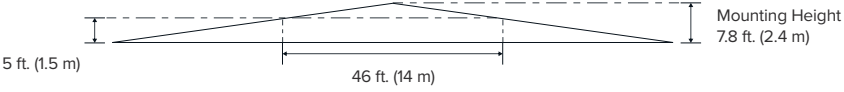

Top View

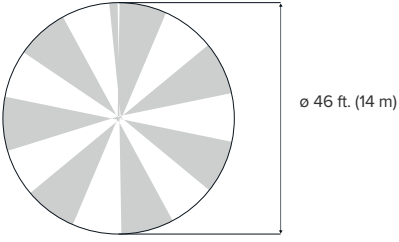

For UL Certified Installations, the coverage radius is 41 ft (12.5 m) at 7.8 ft (2.4 m) height at medium sensitivity.

For optimum detection, install the device in a location where multiple zones are crossed when someone is passing by. See below examples of suitable installation vs non-ideal installation. In **Figure 1** and **Figure 2**, passersby will cross several zones to walk from one door to another.

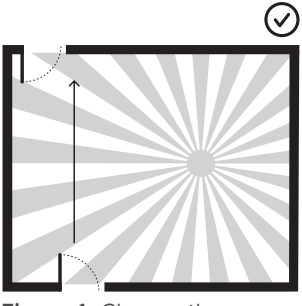

Figure 1: Choose the sensor placement so that people walking from one door to another cross multiple zones.

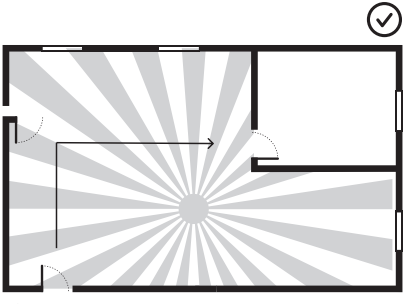

Figure 2: For faster detection, place the sensor away from the pathways between the doors.

In **Figure 3** and **Figure 4**, fewer detection zones are crossed, resulting in longer detection times.

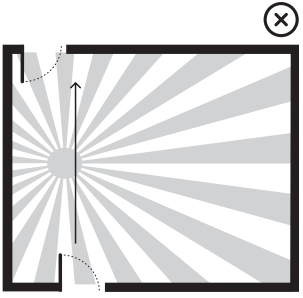

Figure 3: Avoid installing the sensor between two doors or open areas.

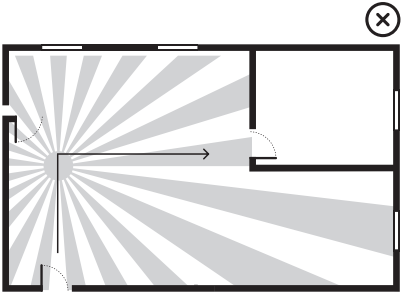

Figure 4: The sensor takes longer to detect movement when fewer zones are crossed.

The images of the zones are illustrative and do not accurately represent the actual detection zones of this sensor.

Choosing an appropriate installation location is important to get the best accuracy out of the sensor.

5. Wiring

Use cables between 16 and 22 AWG with a minimum length of 6 ft.

Wiring methods shall be in accordance with the National Electric Code (NEC), NFPA 70.

Connect the 9-pin pluggable terminal block according to your system requirements. During the mounting phase (see the Mounting section), attach the pluggable terminal block to the device's 9-pin receptacle

CAUTION: When installing the device, route field wiring away from sharp edges, corners, and internal components.

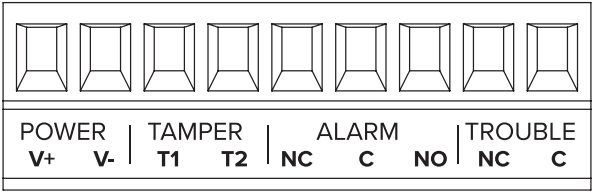

Signal contacts: maximum rated at 30 VDC/60 mA (resistive).

- **Terminals V+ and V-:**
  Ensure the power supply is within the specified range: 6 - 24 VDC.
- **Tamper Terminals (T1) and (T2):**
  Normally closed contacts to indicate a tamper condition.
- **Alarm Terminals (NC), (C) and (NO):**
  Use (NC) and (C) terminals for normally closed and (NO) and (C) for normally open output.
- **Trouble Terminals (NC) and (C):**
  Normally closed terminals to indicate trouble detection.

Unit shall be powered via a UL Listed Burglar alarm power supply with a Class 2 Power Limited Output. The power supply shall have a minimum of 4 hours of standby power to power the unit.

6. Device Configuration

There are two groups of configuration switches on the back of the device:

- The EOL switches configure the End-of-Line Resistor value for each output: Tamper NC, Alarm NC, Alarm NO, and Trouble NC
- The User Settings switch configures the sensor installation height, sensitivity and visual feedback.

The next subsections explain how to configure them correctly.

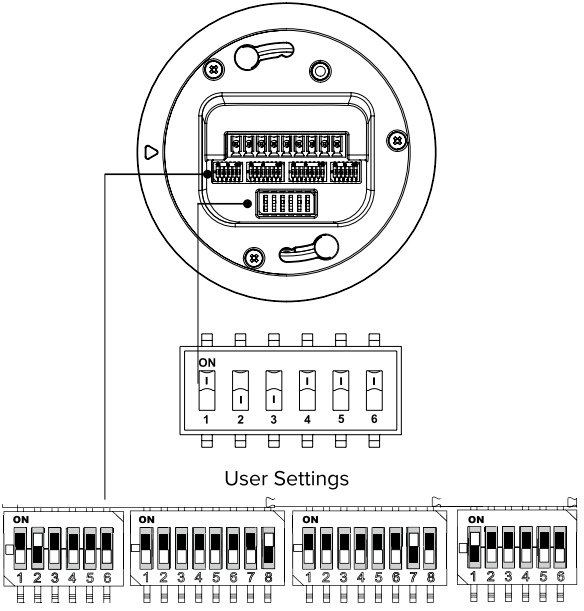

Tamper EOL Resistors

Alarm NC EOL Resistors

Alarm NO EOL Resistors

Trouble EOL Resistors

6.1. End-of-Line (EOL) Resistors

To disable the EOL resistors, select option 1 for the corresponding output. This is the default configuration of the sensor.

Each of the four outputs (Tamper, Alarm NC, Alarm NO, and Trouble) can be configured with different resistance values, ensuring the device is compatible with a wide range of panels.

	Tamper EOL	Alarm NC EOL	Alarm NO EOL	Trouble EOL
	1..6	1..8	1..8	1..6
1	Short (0 Ohms)	Short (0 Ohms)	Open Circuit	Short (0 Ohms)
2	1.0 kOhms	1.0 kOhms	1.0 kOhms	1.0 kOhms
3	2.2 kOhms	2.2 kOhms	2.2 kOhms	2.2 kOhms
4	5.6 kOhms	3.0 kOhms	3.0 kOhms	5.6 kOhms
5	6.8 kOhms	4.7 kOhms	4.7 kOhms	6.8 kOhms
6	10 kOhms	5.6 kOhms	5.6 kOhms	10 kOhms
7		6.8 kOhms	6.8 kOhms	
8		10 kOhms	10 kOhms	

It's recommended to select only one EOL resistor option per output. If more than one option is selected, the resultant EOL resistor value will be the parallel of the resistances.

Make sure to use a value compatible with your system.

The image below is an example of an End-of-Line resistor configuration.

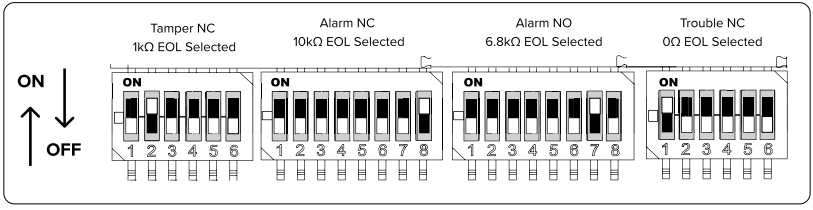

The internal connection of the End-of-Line resistors for Normally Closed (NC) and Normally Open (NO) contacts is arranged as follows.

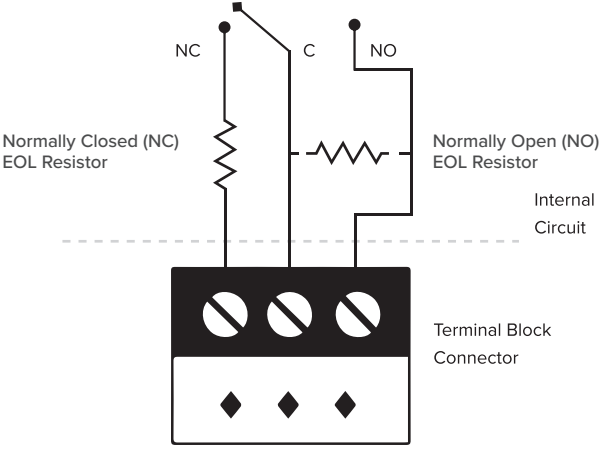
NC
C
NO
Normally Closed (NC)
EOL Resistor
Normally Open (NO)
EOL Resistor
Internal
Circuit
Terminal Block
Connector

6.2. User Settings

The User Settings switch contains 6 positions:

- Positions 1, 2, and 3 (labeled **H1, H2, H3,** respectively) are used for height configuration.
- Positions 4, 5 (labeled **S1, S2,** respectively): used for sensitivity configuration.
- Position 6 (labeled **LED**): used for enabling or disabling visual feedback.

6.2.1. Setting the Installation Height

Use the switches H1, H2, and H3 to configure the sensor height that best matches the installation, according to the table below.

Installation Height	7.8 ft 2.4m	10.0 ft 3.0m	11.5 ft 3.5m	13.1 ft 4.0m	14.8 ft 4.5m	16.4 ft 5.0m	18.0 ft 5.5m	20 ft 6m
H1	OFF	**ON**	OFF	**ON**	OFF	**ON**	OFF	**ON**
H2	OFF	OFF	**ON**	**ON**	OFF	OFF	**ON**	**ON**
H3	OFF	OFF	OFF	OFF	**ON**	**ON**	**ON**	**ON**

6.2.2. Setting the Sensor Sensitivity

Use the switches S1 and S2 to adjust the sensor sensitivity, according to the table below.

Sensor Sensitivity	Lowest	Low	Medium	High
S1	OFF	**ON**	OFF	**ON**
S2	OFF	OFF	**ON**	**ON**

- **Lowest**: Used in harsh environments with the highest levels of infrared disturbance. Requires the most movement to trigger.
- **Low**: Used in environments with elevated levels of infrared disturbance.
- **Medium**: Recommended for most environments.
- **High**: Used in environments with minimal infrared disturbance. Detects smaller movements more readily.

Height settings of 7.8 ft (2.4 m) and 20 ft (6.0 m) have been evaluated by UL at all sensitivity levels. Height settings of 10 ft (3.0 m), 11.5 ft (3.5 m), 13.1 ft (4.0 m), 14.8 ft (4.5 m), 16.4 ft (5.0 m), and 18 ft (5.5 m) have been evaluated by UL at Medium sensitivity.

6.2.3. Enabling/Disabling visual feedback

The LED switch enables or disables visual feedback for alarm, tamper, and trouble conditions.

Even if the visual feedback is OFF, the LEDs will turn on when the sensor is powered up and during the walk test, after which they will remain off.

6.2.4. Configuration Example

The following image provides an example of a configuration setup.

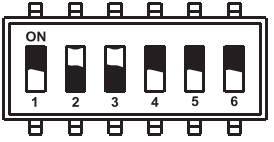

1 (H1): OFF
2 (H2): ON
3 (H3): ON

Sensor Height 18 ft. (5.5 m)

4 (S1): OFF
5 (S2): OFF
6 (LED): OFF

Lowest Sensitivity

Visual feedback disabled

7. Mounting

First, prepare the Mount Plate by installing the two supplied shoulder screws into either the holes labeled “A” or the holes labeled “B”, choosing the orientation that best suits your aesthetics preference.

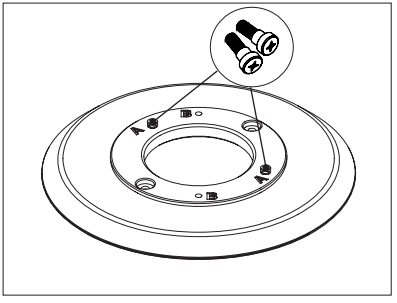

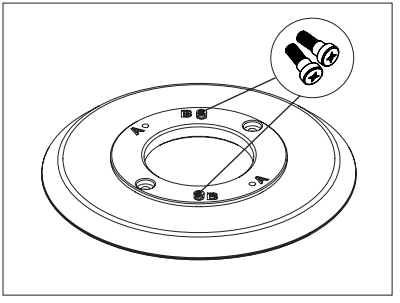

7.1. Ceiling Mounting

Attach the Base Plate to the ceiling using two #8 x 1 inch screws and two S6 nylon wall plugs. Then, attach the Mount Plate to the Base Plate with two 3.5 mm x 8 mm screws.

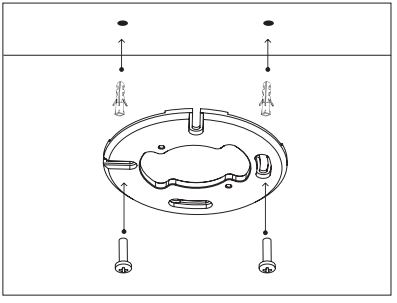

Step 1

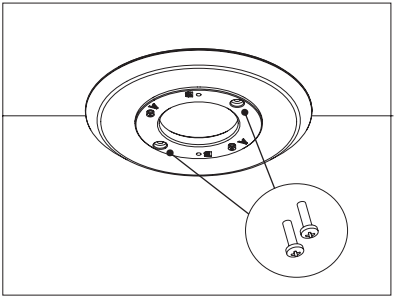

Step 2

Insert the pre-wired terminal block connector into the device receptacle (see the Wiring section). Align the sensor keyhole slots with the mount plate screws, then twist clockwise. Verify that the sensor is securely attached.

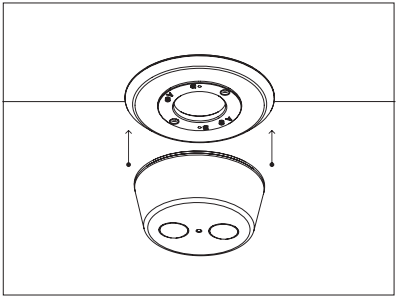

Step 3

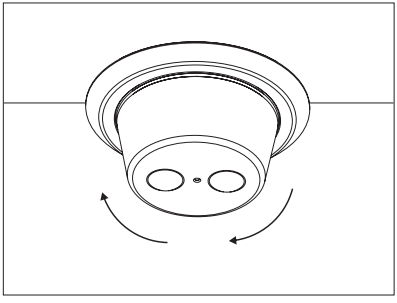

Step 4

7.2. Octagonal Electrical Box Mounting

Attach the Base Plate to the Electrical Box using two #8-32 UNC screws. Then, attach the Mount Plate to the Base Plate with two 3.5 mm x 8 mm screws.

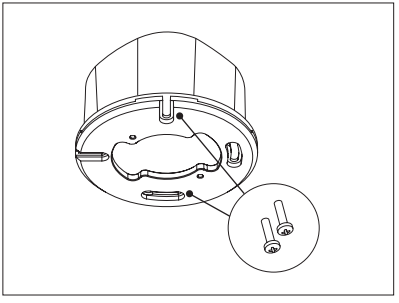

Step 1

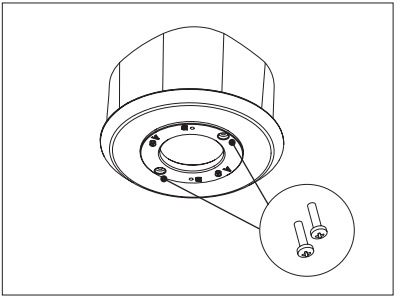

Step 2

Insert the pre-wired terminal block connector into the device receptacle (see the Wiring section). Align the sensor keyhole slots with the mount plate screws, then twist clockwise. Verify that the sensor is securely attached.

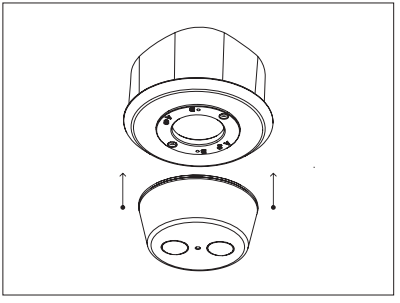

Step 3

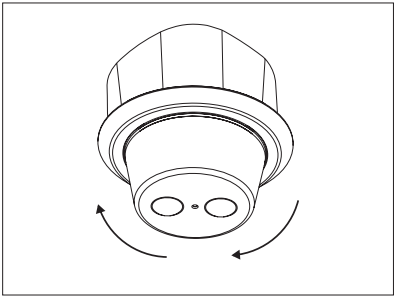

Step 4

8. LED Patterns For Visual Feedback

The meaning of each pattern is explained below:

- RED: tampering attempt;
- GREEN: walk test mode is active;
- YELLOW: trouble condition;
- DARK BLUE: the sensor is starting/warming up;
- CYAN: movement detected.

9. Walk Test

The walk test feature aims to help the installer guarantee that the sensor is working correctly within the coverage zone by enabling visual feedback for alarm, tamper, and trouble conditions even if the LED switch is disabled.

To enable Walk Test, using a flashlight, swing the light beam past the light sensor window at least 6 times, consistently holding the beam in the direction of the window for 0.5 seconds each pass. The walk test starts as soon as the LEDs turn green.

Move inside the coverage zone; a cyan LED interface confirms that the sensor is detecting your presence.

The sensor stays in the walk test mode for 10 minutes. If a longer duration is needed, reinitiate the walk test mode.

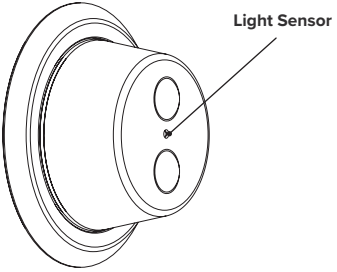

The walk test feature is available for the first 24 hours after power up.

If the desired coverage is not achieved, it is recommended to increase the sensor sensitivity or reposition the device and repeat the walk test.

It is recommended to perform the Walk Test at least once per year to ensure proper operation.

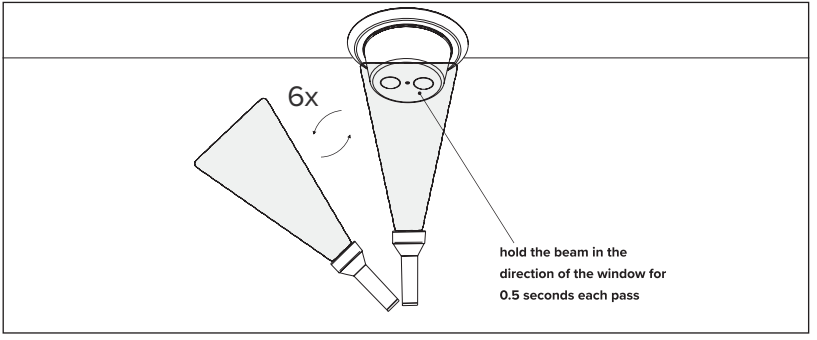

10. Specifications

Dimensions	3.55 x 3.55 x 1.85 in 90 x 90 x 46.5 mm
Horizontal Field of View	360°
Detection Range	59 ft. ø (18 m) at 20 ft. (6 m) height 46 ft. ø (14 m) at 7.8 ft. (2.4 m) height
Mounting Heights	7.8 ft. (2.4 m) to 20 ft. (6 m)
Mounting Locations	Ceiling and standard octagonal electrical box
Detection Sensor Type	Passive Infrared

Power	6 - 24 VDC 100 mA (typical) @ 12V (LEDs ON) 40 mA (typical) @ 12V (LEDs OFF)
Signal Outputs	Rated at 30 VDC/60 mA (resistive) • Alarm Form C contacts • Tamper Form B contacts • Trouble Form B contacts Maximum resistance (closed contacts): 18 Ω
End-of-Line resistors	Configurable options from 1 kΩ to 10 kΩ
Operating Temperature	-4 to 140 °F (-20 to 60 °C)
Humidity	93%, non-condensing
Alarm Relay Duration	4 seconds
Alarm Blind Time	1 second

For UL Certified Installations, the coverage diameter is 53 ft (16 m) at 20 ft (6 m) height and 41 ft (12.5 m) at 7.8 ft (2.4 m) height.

11. Troubleshooting

What should be done if the sensor is in a Tamper condition?

If the sensor is in a tamper condition, it means the sensor has been opened or is loosely attached to its Mount Plate. Ensure the device is properly closed and firmly fixed in place.

What should be done if the sensor is in a Trouble condition?

The trouble condition indicates an internal issue that may cause malfunction. Turn off the sensor, wait 10 seconds, then turn it back on. If the issue continues, please contact support.

What should be done if the sensor is activating when no one is within the coverage area?

If the sensor frequently activates when no one is in the coverage area, ensure the installation height is set appropriately. If the installation height is set appropriately and the problem persists, reduce the sensor sensitivity. If the problem continues, check for potential noise sources that may affect sensor performance (see the Installations Considerations section) and consider repositioning the sensor.

What to do if the sensor is taking too long to activate when someone is within the coverage area?

If the sensor takes too long to activate when someone is in the coverage area, ensure the installation height is correct. If the installation height is set appropriately, increase the sensor sensitivity.

An overcurrent protection element (PTC) and a transient voltage suppressor diode (TVS) will protect the device against out of specification inputs.
DO NOT modify, disable or bypass these elements.

Should you require any further assistance, do not hesitate to contact support.

COMPLIANCE LISTINGS

- UL 639
- FCC Part 15, Subpart B, under the model number listed below

FCC SUPPLIER DECLARATION OF CONFORMITY

Model Number: IP3606WN
Product Name: Panoramic 360° Ceiling-Mount People Sensor

Perimeter AI Inc.
7421 Burnet Road, Suite 276, Austin TX 78757 USA
support@echo54.com

This device complies with part 15 of the FCC Rules. Operation is subject to the following two conditions:

(1) This device may not cause harmful interference, and **(2)** this device must accept any interference received, including interference that may cause undesired operation.

This equipment has been tested and found to comply with the limits for a Class B digital device, pursuant to part 15 of the FCC Rules. These limits are designed to provide reasonable protection against harmful interference in a residential installation. This equipment generates, uses and can radiate radio frequency energy and, if not installed and used in accordance with the instructions, may cause harmful interference to radio communications. However, there is no guarantee that interference will not occur in a particular installation. If this equipment does cause harmful interference to radio or television reception, which can be determined by turning the equipment off and on, the user is encouraged to try to correct the interference by one or more of the following measures:

- Reorient or relocate the receiving antenna.
- Increase the separation between the equipment and receiver.
- Connect the equipment into an outlet on a circuit different from that to which the receiver is connected.
- Consult the dealer or an experienced radio/TV technician for help.

Changes or modifications not expressly approved by the party responsible for compliance could void the user's authority to operate the equipment.

MAGNASPHERE®

magnasphere.com

For technical assistance, contact **support@magnasphere.com** or call **262-347-0711**.