REVISION	REVISION DATE	APPROVED BY	DESCRIPTION OF CHANGES
-	DD MM YYYY	---	-
-	DD MM YYYY	---	-
-	DD MM YYYY	---	-

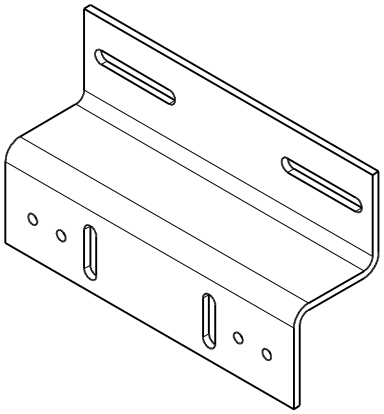

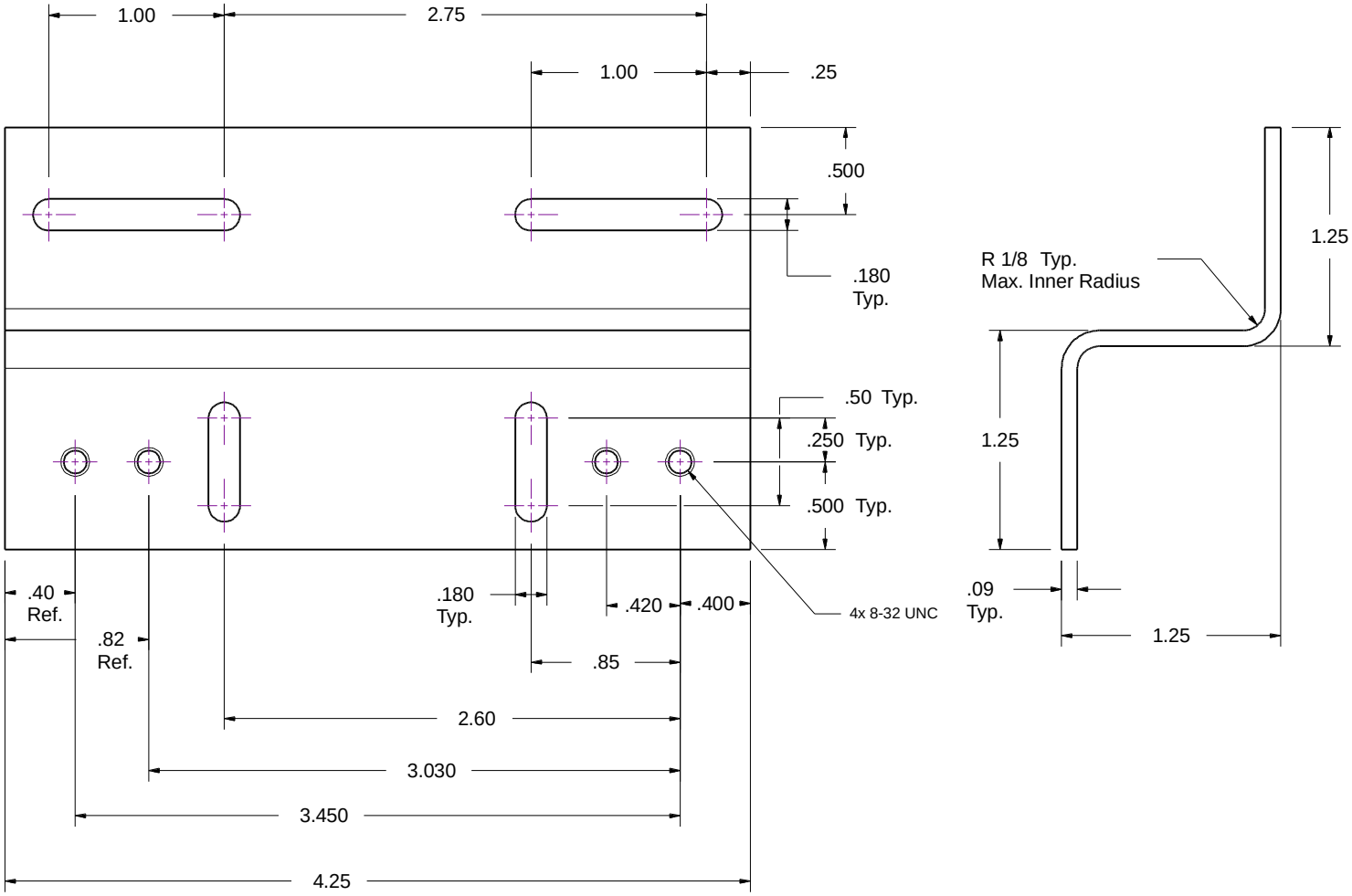

UNLESS OTHERWISE NOTED DIMENSIONS ARE IN INCHES FRACTIONS DECIMALS ANGLES ±1/64 .XX ±.010 ±0°30' .XXX ±.005	PAGE 1 SCALE FULL DRAWN BY / DATE AS Apr. 19 2017	MAGNASPHERE®
RAW MATERIAL Aluminum	CHECKED BY / DATE JH May 25 17	DESCRIPTION 1612 L1.5 Z Bracket DRAWING NUMBER/NAME 1612
MATERIAL SPEC 5052	PROD APRV / DATE JH May 25 17	PART NUMBER
MATERIAL FINISH	WEIGHT N/A	